Power Electronics

DC-DC step-up conversion

Dr. Yee Wei Law ⟨yeewei.law@unisa.edu.au⟩

August 19, 2023

Fresh from finishing off buck conversion (see knowledge base entry), let us move on to boost and buck-boost conversions.

Contents

1. Boost converter

"Boost converter" is another name for "step-up converter". Figure 1 shows the boost converter circuit.

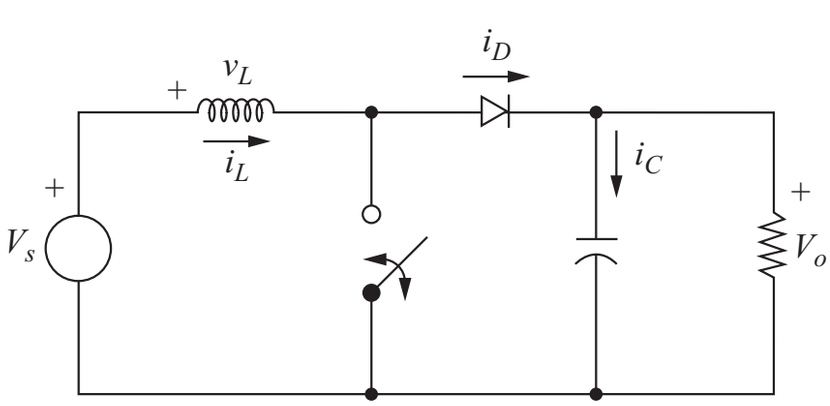

Figure 1: A boost converter [Har11, Figure 6-8(a)].

Notice how the switch, diode and inductor seem to have been rotated counter-clockwise in terms of their location, compared to the buck converter, while the output capacitor remains "fixed".

Like the buck converter, the boost converter can operate in CCM and DCM, but only CCM will be discussed in this lecture.

Example 1

This example is related to a boost converter available on Amazon.com, shown in Figure 2.

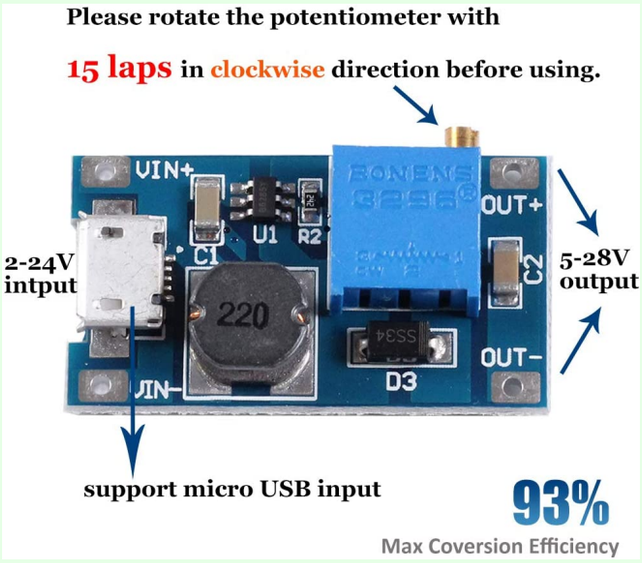

Figure 2: A commercially available boost converter.

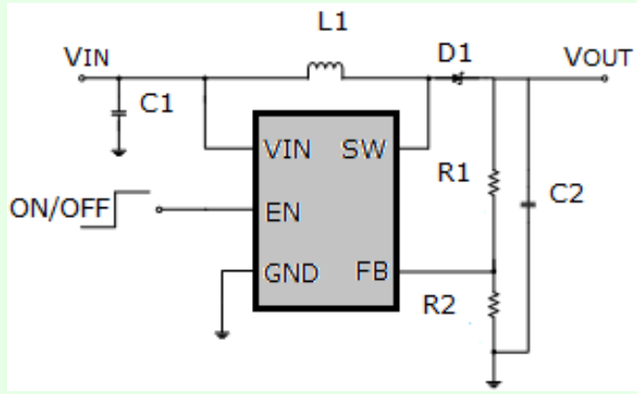

Figure 3: Circuit diagram of a reference boost converter design based on the MT3608.

The converter uses the 1.2 MHz 28 V 2 A boost converter controller IC MT3608 from Aerosemi Technology Co., Ltd., which features an integrated 80 mΩ power MOSFET.

The converter circuit in Figure 2 is similar to the reference design in Figure 3.

Next, let us analyze the operation of the boost converter in CCM. The same assumptions for analyzing the buck converter in Lecture 4 Sec. 2 apply here.

1.1. CCM analysis

Figure 4 shows the equivalent circuits for the cases when the switch is closed, and when the switch is open.

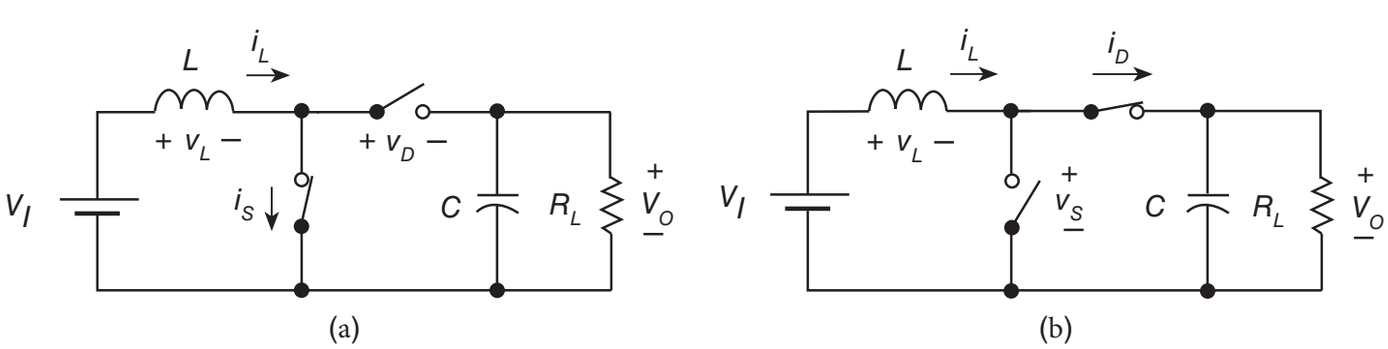

Figure 4: Equivalent circuits of the boost converter in Figure 1: (a) when switch is closed, (b) when switch is open [Kaz16, Figure 3.1].

During time interval $(0, DT]$, when the switch is closed,

- The diode is off.

- The voltage across the inductor is

$$v_L = V_I = L\frac{\mathrm{d}i_L}{\mathrm{d}t}.$$

Integrating the above gives us the inductor current:

$$\begin{aligned} i_L(t) - i_L(0) &= \frac{V_I}{L}t \\ \implies \Delta i_L = i_L(DT) - i_L(0) &= \frac{V_I DT}{L}. \end{aligned} \tag{1}$$

During time interval $(DT, T]$, when the switch is open,

- The diode becomes forward-biased to carry the inductor current.
- The voltage across the inductor is

$$v_L = V_I - V_O = L\frac{\mathrm{d}i_L}{\mathrm{d}t}.$$

Integrating the above gives us the inductor current:

$$\begin{aligned} i_L(t) - i_L(DT) &= \frac{V_I - V_O}{L}(t - DT) \\ \implies \Delta i_L = i_L(DT) - i_L(T) &= \frac{(V_O - V_I)(1-D)T}{L}. \end{aligned} \tag{2}$$

Figure 5 summarizes graphically the idealized voltage and current waveforms of the boost converter.

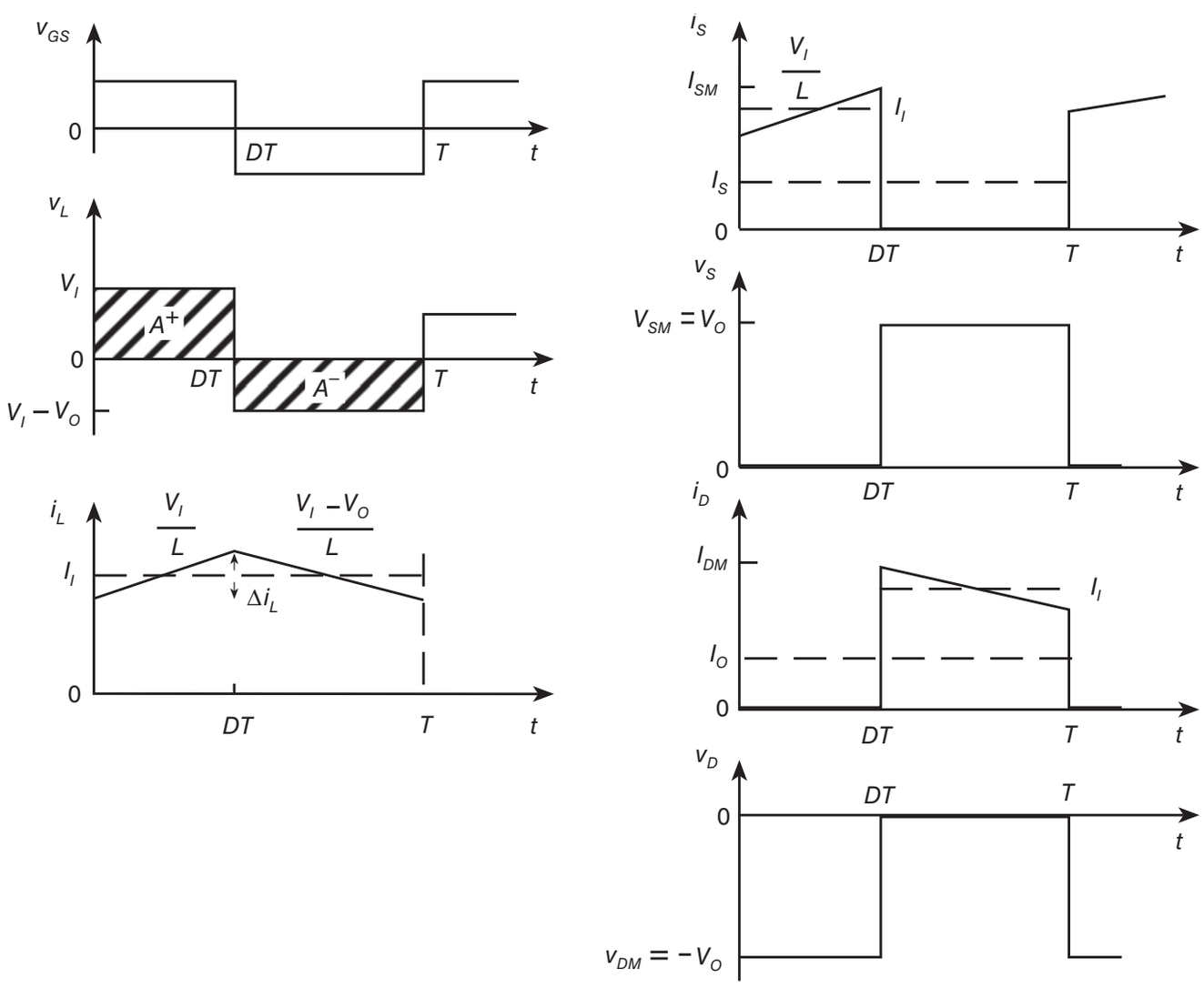

Figure 5: Idealized CCM voltage and current waveforms of the boost converter circuit in Figure 4 [Kaz16, Figure 3.2].

Either by equating (1) to (2), or by invoking the inductor volt-second balance principle,

$$V_I DT = (V_O - V_I)(1-D)T \implies V_I = V_O(1-D).$$

$$\therefore V_O = \frac{V_I}{1-D}, \qquad D = 1 - \frac{V_I}{V_O}. \tag{3}$$

The preceding equation shows that if $D = 0$ (i.e., switch stays open), $V_O = V_I$.

- As D increases, V_O increases. The boost converter thus produces an output voltage that is greater than or equal to the input voltage.
- When $D \to 1$, in theory, $V_O \to \infty$, but in practice, due to losses, V_O remains at a finite albeit high value.

Substituting (3) and $T = 1/f_s$ into (1) and (2), we get

$$\Delta i_L = \frac{V_I D}{f_s L} = \frac{V_O D(1-D)}{f_s L} = \frac{V_I(V_O - V_I)}{f_s L V_O}. \tag{4}$$

As usual, we are also interested in the average inductor current I_L. Since the inductor is no longer connected to the load resistor (and output capacitor), I_L no longer equals the average load current. However, equating the input power to the output power, we get

$$V_I I_L = \frac{V_O^2}{R} = \frac{V_I^2}{R(1-D)^2},$$

$$\therefore I_L = \frac{V_O^2}{R V_I} = \frac{V_I}{R(1-D)^2} = \frac{I_O}{1-D}, \tag{5}$$

where I_O is the average output current.

The maximum and minimum values of i_L are thus

$$I_{L\max} = I_L + \frac{\Delta i_L}{2} = V_I\left[\frac{1}{R(1-D)^2} + \frac{D}{2f_s L}\right], \tag{6}$$

$$I_{L\min} = I_L - \frac{\Delta i_L}{2} = V_I\left[\frac{1}{R(1-D)^2} - \frac{D}{2f_s L}\right]. \tag{7}$$

For a maximum load resistance $R_{L\max}$, the minimum inductance $L_{\min}$ for maintaining a continuous i_L can be obtained by solving

$$I_{L\min} = V_I\left[\frac{1}{R_{L\max}(1-D)^2} - \frac{D}{2f_s L}\right] = 0.$$

$$\therefore L_{\min} = \frac{R_{L\max} D(1-D)^2}{2f_s}. \tag{8}$$

More often though, instead of $R_{L\max}$, the desired (maximum) value of Δi_L is used as the design criterion. In other words, the required L is determined by solving (4):

$$L = \frac{V_I D}{f_s \Delta i_L} = \frac{V_O D(1-D)}{f_s \Delta i_L} = \frac{V_I(V_O - V_I)}{f_s V_O \Delta i_L}. \tag{9}$$

While the inductor provides inertia to the current, the capacitor plays the same role to the voltage.

Consideration of the capacitance value, C, comes into play when we relax the small-ripple approximation and consider the output voltage ripple, denoted ΔV_O.

The equivalent circuit of the boost converter's output stage in Figure 6 — taking into account the capacitor's ESR — and the current/voltage waveforms in Figure 7 serve as the basis for our analysis.

When the diode is off, the capacitor discharges through the resistor, with current that is V_O/R on average.

When the diode is on, the capacitor charges from the inductor current which peaks at $I_{L\max}$.

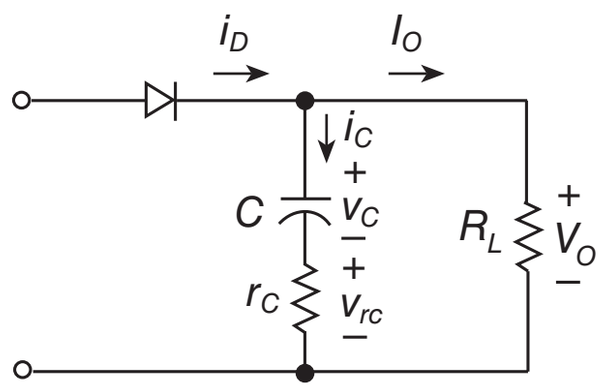

Figure 6: Equivalent circuit of the boost converter's output stage, taking into account the capacitor's ESR, denoted r_C [Kaz16, Figure 3.6].

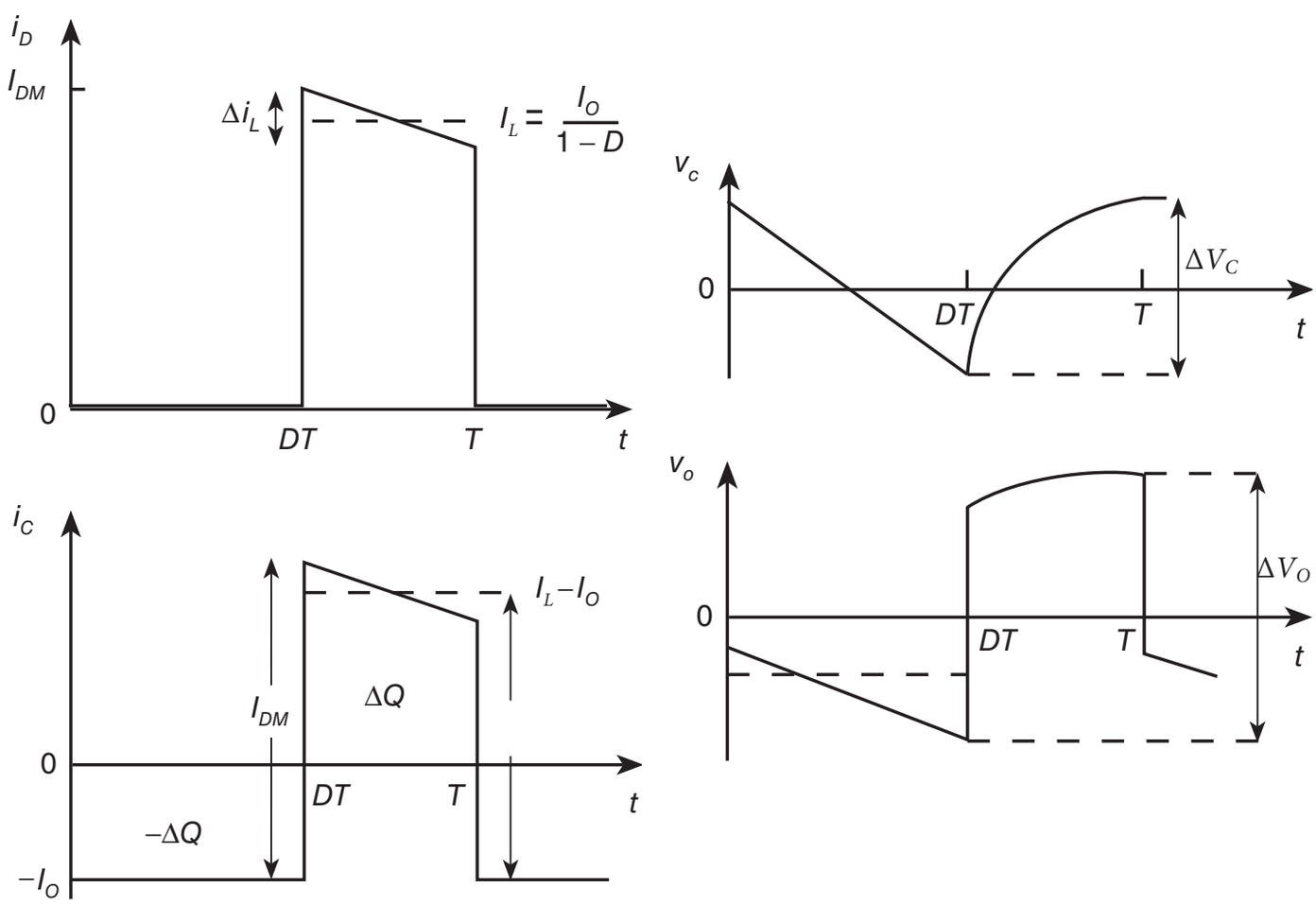

Figure 7: For analyzing voltage ripple: i_D is diode current, i_C is capacitor current, v_C is the capacitor voltage, $v_O = v_C + v_{rc}$ is the output voltage [Kaz16, Figure 3.7].

Let us relate the capacitor voltage to the capacitor current given by

$$
\begin{aligned}
i_C = C\frac{\mathrm{d}v_C}{\mathrm{d}t} &\implies i_D - i_O = C\frac{\mathrm{d}v_C}{\mathrm{d}t} \\
&\implies \int_{t=DT}^{T} (i_L - i_O)\,\mathrm{d}t = C\Delta V_C \\
&\implies (I_L - I_O)(1-D)T = C\Delta V_C \\
&\implies \left(\frac{I_O}{1-D} - I_O\right)(1-D) = f_s C\Delta V_C \\
&\implies \frac{V_O D}{R} = f_s C\Delta V_C,
\end{aligned}
$$

where

$$\Delta V_C \approx \Delta V_O - I_{L\max} r_C. \tag{10}$$

Above, the current integral is approximated based on the plot of i_C in Figure 7. Rearranging the preceding equation, we get an expression for the required capacitance:

$$C = \frac{D}{f_s R \Delta V_C / V_O}. \tag{11}$$

1.2. CCM design considerations

The design considerations for the boost converter is similar to those for the buck converter in Lecture 4 Sec. 2.2, except consideration of the capacitor voltage overshoot (see Lecture 4 Eq. (13)) does not apply. Thus, we proceed to an example.

Example 2

This example was heavily expanded from [Har11, EXAMPLE 6-5]. A boost converter is required to have an output voltage of 8 V and to supply a load current of 1 A. The input voltage varies from 2.7 to 6 V. A control circuit adjusts the duty cycle to keep the output voltage constant. Suppose a switching frequency of 200 kHz is selected.

1. Determine a value for the inductor such that the variation in inductor current is no more than 40% of the average inductor current for *all* values of V_I.
2. Determine a value of an *ideal* capacitor such that the output voltage ripple is no more than 2 percent.
3. Determine the maximum capacitor ESR for a 2 percent ripple.

Use the inductor and capacitor values in Appendix A.

Solution: Known values are $V_O = 8$ V, $R = V_O/1 = 8\ \Omega$, $f_s = 2\times 10^5$ Hz. Notice there is a range of input voltages, and correspondingly there is a range of inductor and capacitor values.

1. For each value of V_I, we can calculate D, I_L and Δi_L. Based on the requirement that $\Delta i_L \leq kI_L$ ($k = 0.4$), Eq. (9) tells us what the *minimum* L should be for any value of V_I, i.e.,

$$L = \frac{V_I D}{f_s \Delta i_L} = \frac{V_I}{f_s k I_L}\left(1 - \frac{V_I}{V_O}\right) = \frac{R V_I^2}{f_s k V_O^2}\left(1 - \frac{V_I}{V_O}\right).$$

L turns out to be a cubic function of V_I.

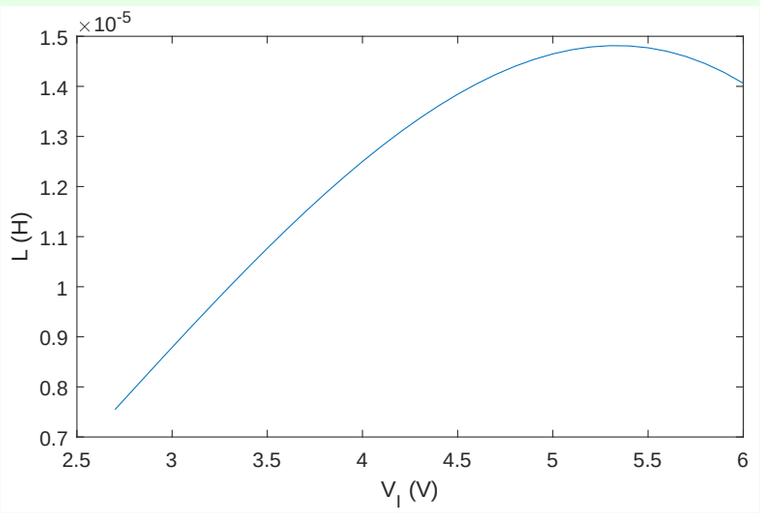

We can plot L against V_I as above, and pick the *maximum* L for our answer, but we all know from high-school calculus that is equivalent to differentiating L by V_I and picking the value of L that corresponds to the point where

$$\frac{\mathrm{d}L}{\mathrm{d}V_I} = \frac{R V_I (2V_O - 3V_I)}{f_s k V_O^3} = 0, \qquad \frac{\mathrm{d}^2 L}{\mathrm{d}V_I^2} = \frac{2R(V_O - 3V_I)}{f_s k V_O^3} < 0.$$

When $V_I = 2V_O/3 = 5.\dot{3}$ V (within the range of 2.7 to 6 V), $\frac{\mathrm{d}L}{\mathrm{d}V_I} = 0$ and $\frac{\mathrm{d}^2 L}{\mathrm{d}V_I^2} < 0$, hence the value of L corresponding to $V_I = 5.\dot{3}$ V is the desired inductor value:

$$L = \frac{R V_I^2}{f_s k V_O^2}\left(1 - \frac{V_I}{V_O}\right) = 14.81\ \mu\mathrm{H}. \tag{12}$$

Picking the closest larger value from Appendix A, L should be 15 μH.

2. For the required $\Delta V_C / V_O = 0.02$, Eq. (11) gives

$$C = \frac{D}{f_s R \Delta V_C / V_O} = \frac{V_O - V_I}{f_s R \Delta V_C},$$

which is a monotonically decreasing affine function of V_I.

For the maximum value of C, pick the minimum V_I, which is $V_I = 2.7$ V, and the capacitor value turns out to be $C = 20.7\ \mu$F. Picking the closest larger value from Appendix A, C should be 22 μF.

3. Using Eq. (11), we can calculate ΔV_C, and given $\Delta V_O = rV_O$ ($r = 0.02$), we can then use Eq. (10) to calculate $r_C = (\Delta V_O - \Delta V_C)/I_{L\max}$ for each V_I, where

$$I_{L\max} = I_L + \frac{\Delta i_L}{2} = V_I\left[\frac{1}{R(1-D)^2} + \frac{D}{2 f_s L}\right] = \frac{-R V_I^3 + R V_O V^2 + 2 f_s L V_O^3}{2 f_s R L V_O V_I}.$$

⚠ It is important to keep L as is in the expression above, rather than subsituting (12) into the expression above, since we picked a different value than what (12) gives us. The same applies to C below.

Continuing,

$$r_C = \frac{\Delta V_O - \Delta V_C}{I_{L\max}} = \left[rV_O - \frac{V_O}{f_s RC}\left(1 - \frac{V_I}{V_O}\right)\right]\left(\frac{2f_s RLV_O V_I}{-RV_I^3 + RV_O V_I^2 + 2f_s LV_O^3}\right)$$
$$= \left(\frac{2LV_O}{C}\right)\frac{-V_I^2 + (V_O - rf_s RCV_O)V_I}{RV_I^3 - RV_O V_I^2 - 2f_s LV_O^3},$$

which is a rational function of V_I, as plotted below.

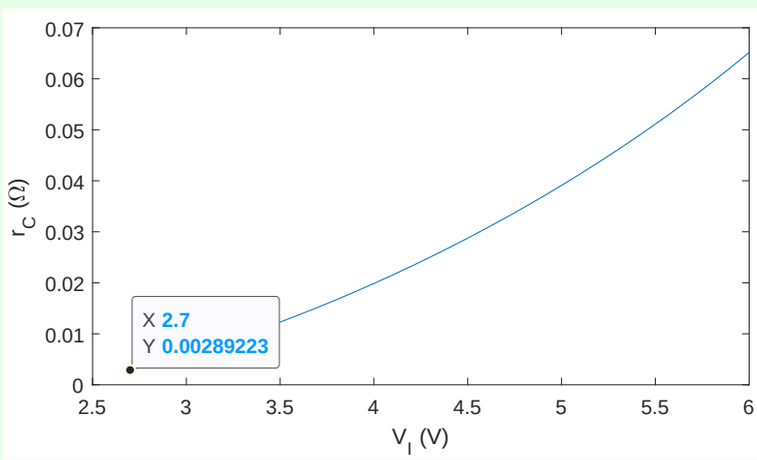

The plot above shows that r_C is minimum when V_I is minimum (i.e., $V_I = 2.7$ V), therefore $r_C = 2.89$ mΩ.

2. Buck-boost converter

The buck-boost converter, as the name implies, can step down or step up the input voltage.

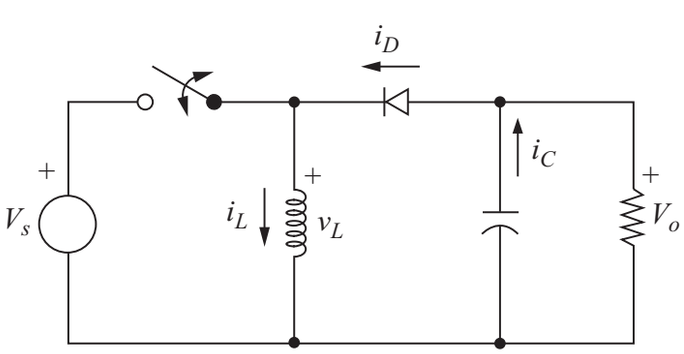

Figure 8: A buck-boost converter [Har11, Figure 6-11(a)].

Figure 8 shows the buck-boost converter circuit.

Notice how the diode and inductor have swapped positions, compared to the buck converter in Lecture 4 Figure 8, while the switch and output capacitor remain "fixed".

Also notice the direction of the diode is inverted, compared to the boost converter in Figure 1.

Figure 9 shows an alternative version of the buck-boost converter, which consists of a buck converter and a boost converter in series.

The higher number of components of this version means the earlier version is more economical/practical.

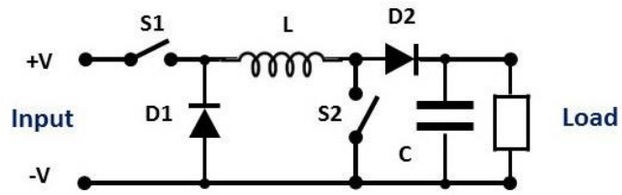

Figure 9: An alternative version of the buck-boost converter.

Example 3

This example is related to a buck-boost converter available on Amazon.com, shown in Figure 10.

The converter uses the 400 kHz 60 V 4 A buck-boost converter controller IC XL6009 from XLSEMI (note XL6019 is the newer version), which features an integrated depletion-mode N-MOSFET.

Figure 10: A commercially available buck-boost converter.

2.1. CCM analysis

Figure 11 shows the equivalent circuits for the cases when the switch is closed, and when the switch is open.

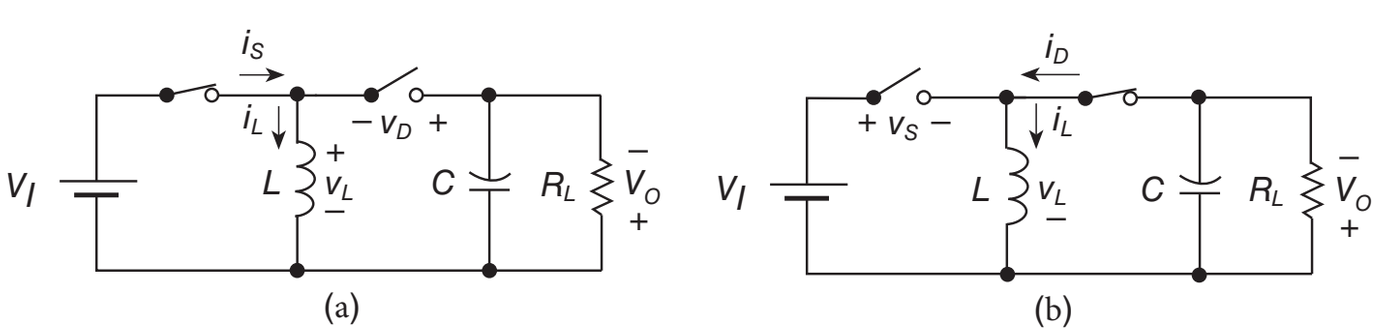

Figure 11: Equivalent circuits of the buck-boost converter in Figure 8: (a) when switch is closed, (b) when switch is open [Kaz16, Figure 4.1]. Note the polarity of V_O.

During the time interval $(0, DT]$, when the switch is closed,

- The diode is reverse-biased at $v_D = -V_I - V_O$.
- The voltage across the inductor is

$$v_L = V_I = L\,\frac{\mathrm{d}i_L}{\mathrm{d}t}\,.$$

Integrating the above gives us the inductor current:

$$\begin{aligned} i_L(t) - i_L(0) &= \frac{V_I}{t}t \\ \Longrightarrow \Delta i_L = i_L(DT) - i_L(0) &= \frac{V_I DT}{L}. \end{aligned} \tag{13}$$

During the time interval $(0, DT]$, when the switch is closed,

- The diode becomes forward-biased to carry the inductor current, when i_L starts falling, causing v_L to become negative.
- The voltage across the inductor is

$$v_L = -V_O = L\,\frac{\mathrm{d}i_L}{\mathrm{d}t}\,.$$

Integrating the above gives us the inductor current:

$$\begin{aligned} i_L(t) - i_L(DT) &= -\frac{V_O(t - DT)}{L} \\ \Longrightarrow \Delta i_L = i_L(DT) - i_L(T) &= \frac{V_O(1 - D)T}{L}. \end{aligned} \tag{14}$$

Figure 12 summarizes graphically the idealized voltage and current waveforms of the buck-boost converter. Note the average switch current I_S is a fraction D of the average inductor current I_L, i.e., $I_S = DI_L$.

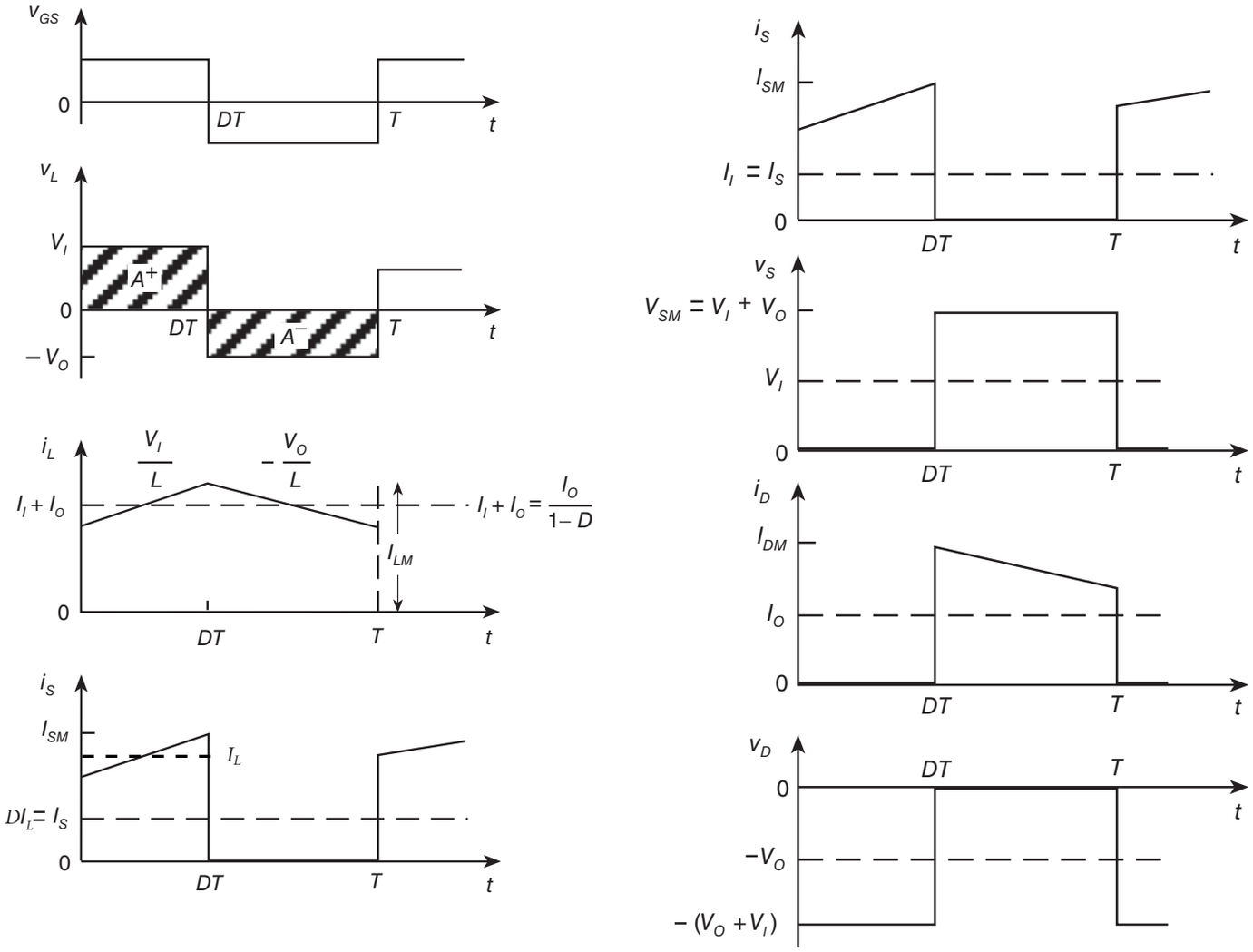

Figure 12: Idealized CCM voltage and current waveforms of the buck-boost converter circuit in Figure 11 [Kaz16, Figure 4.2].

Either by equating (13) to (14), or by invoking the inductor volt-second balance principle,

$$V_I DT = V_O(1-D)T.$$

$$\therefore V_O = V_I \frac{D}{1-D}, \qquad D = \frac{V_O}{V_I + V_O}. \tag{15}$$

If $D < 0.5$, then $V_O < V_I$ (buck), but if $D > 0.5$, then $V_O > V_I$ (boost).

Substituting (15) and $T = 1/f_s$ into (13) and (14), we get

$$\Delta i_L = \frac{V_I D}{f_s L} = \frac{V_O(1-D)}{f_s L} = \frac{V_I V_O}{f_s L(V_I + V_O)}. \tag{16}$$

As usual, we are also interested in the average inductor current I_L. Equating the input power to the output power, and since $I_S = DI_L$ (see the plot of i_S in Figure 12), we have

$$V_I I_S = \frac{V_O^2}{R} \implies I_L = \frac{V_O^2}{DV_I R}.$$

$$\therefore I_L = \frac{V_I D}{R(1-D)^2} = \frac{I_O}{1-D}. \tag{17}$$

The maximum and minimum values of i_L are thus

$$I_{L\max} = I_L + \frac{\Delta i_L}{2} = V_I D\left[\frac{1}{R(1-D)^2} + \frac{1}{2f_s L}\right], \tag{18}$$

$$I_{L\min} = I_L - \frac{\Delta i_L}{2} = V_I D\left[\frac{1}{R(1-D)^2} - \frac{1}{2f_s L}\right]. \tag{19}$$

For a maximum load resistance $R_{L\max}$, the minimum inductance $L_{\min}$ for maintaining a continuous i_L can be obtained by solving

$$I_{L\min} = V_I D\left[\frac{1}{R_{L\max}(1-D)^2} - \frac{1}{2f_s L}\right] = 0.$$

$$\therefore L_{\min} = \frac{R(1-D)^2}{2f_s}. \tag{20}$$

More often though, instead of $R_{L\max}$, the desired (maximum) value of Δi_L is used as the design criterion. In other words, the required L is determined by solving (16):

$$L = \frac{V_I D}{f_s \Delta i_L} = \frac{V_O(1-D)}{f_s \Delta i_L} = \frac{V_I V_O}{f_s \Delta i_L (V_I + V_O)}. \tag{21}$$

While the inductor provides inertia to the current, the capacitor plays the same role to the voltage.

Consideration of the capacitance value, C, comes into play when we relax the small-ripple approximation and consider the output voltage ripple, denoted ΔV_O.

The equivalent circuit of the boost converter's output stage in Figure 13 — taking into account the capacitor's ESR — and the current/voltage waveforms in Figure 14 serve as the basis for our analysis.

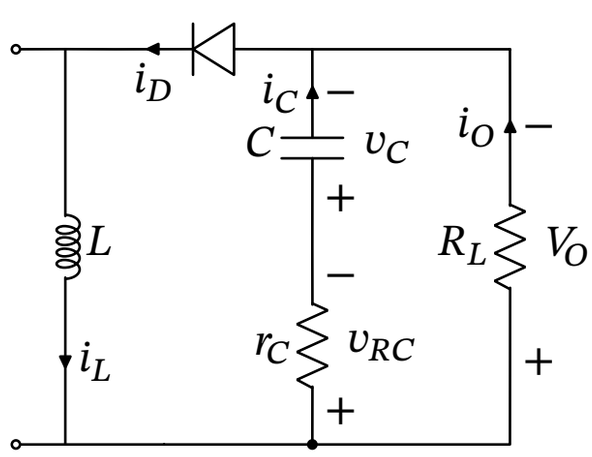

Figure 13: Equivalent circuit of the buck-boost converter's output stage, taking into account the capacitor's ESR, denoted r_C.

When the diode is off, $i_D = i_C + i_O = 0 \implies i_C = -i_O$, i.e., the capacitor discharges through the resistor, with current that is $-I_O = -V_O/R$ on average.

When the diode is on, the capacitor charges from the inductor current which peaks at $I_{L\max}$.

Let us relate the capacitor voltage to the capacitor current given by

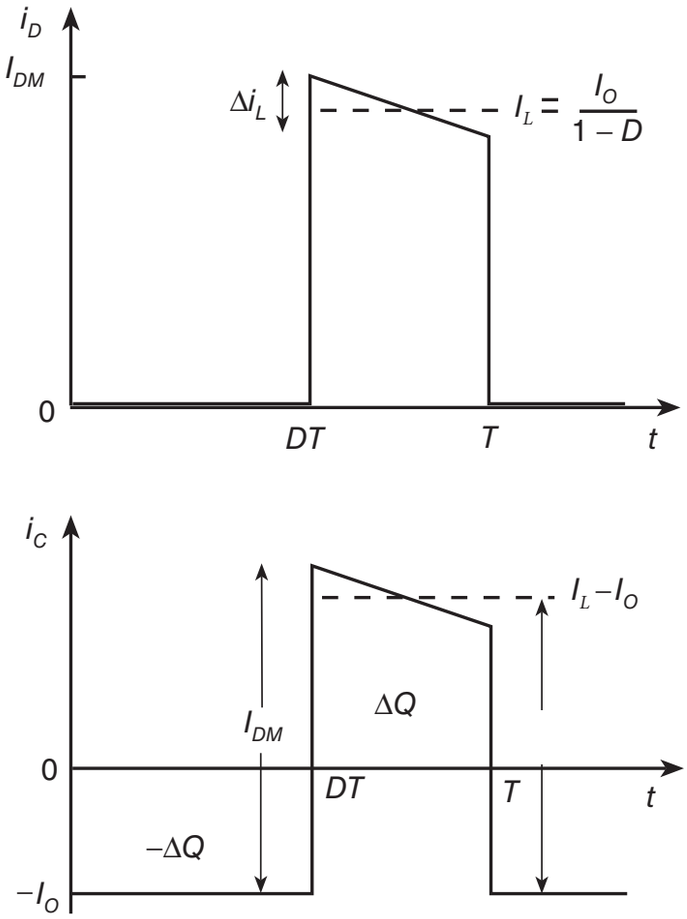

Figure 14: For analyzing voltage ripple: i_D is diode current, i_C is capacitor current [Kaz16, Figure 4.7].

$$i_C = C\frac{\mathrm{d}v_C}{\mathrm{d}t} \implies i_D - i_O = C\frac{\mathrm{d}v_C}{\mathrm{d}t}$$
$$\implies \int_{t=DT}^{T} (i_L - i_O)\,\mathrm{d}t = C\Delta V_C$$
$$\implies (I_L - I_O)(1-D)T = C\Delta V_C$$
$$\implies \left(\frac{I_O}{1-D} - I_O\right)(1-D) = f_s C\Delta V_C$$
$$\implies \frac{V_O D}{R} = f_s C\Delta V_C,$$

where

$$\Delta V_C \approx \Delta V_O - I_{L\max} r_C. \tag{22}$$

Above, the current integral is approximated based on the plot of i_C in Figure 14. Rearranging the preceding equation, we get an expression for the required capacitance:

$$C = \frac{D}{f_s R \Delta V_C / V_O}. \tag{23}$$

Notice how (23) is the same as (11).

2.2. CCM design considerations

The design considerations for the boost converter is similar to those for the buck converter in Lecture 4 Sec. 2.2, except consideration of the capacitor voltage overshoot (see Lecture 4 Eq. (13)) does not apply. Thus, we proceed to an example.

Example 4

This example was adapted from [Har11, EXAMPLE 6-6]. A buck-boost converter has the following parameters: $V_I = 24$ V, $R = 5\ \Omega$, $L = 20\ \mu$H, $f_s = 100$ kHz.

1. Determine the duty cycle to achieve $V_O = 8$ V.
2. Determine whether the converter is operating in CCM.
3. Neglecting capacitor ESR, determine the minimum capacitor value to keep the output voltage ripple to at most 2 percent. Use the capacitor values in Appendix A.

Solution:

1. From (15), $D = \dfrac{V_O}{V_I + V_O} = 0.25$.

2. From (19), $I_{L\min} = V_I D\left[\frac{1}{R(1-D)^2} - \frac{1}{2f_s L}\right] = 0.6333$ A. So the converter is operating in CCM.
3. Given $\Delta V_C/V_O = \Delta V_O/V_O = 0.02$, from (23), $C = \frac{D}{f_s R \Delta V_O/V_O} = 25\ \mu$F. From Appendix A, we can pick $C = 33\ \mu$F.

3. References

[Har11] D. W. Hart, *Power Electronics*, international ed., McGraw-Hill Education, 2011. Available at https://ebookcentral.proquest.com/lib/unisa/detail.action?docID=6120974.

[Kaz16] M. K. Kazimierczuk, *Pulse-width modulated DC-DC power converters*, 2nd ed., John Wiley & Sons, 2016. https://doi.org/10.1002/9781119009597.

A. Standard inductor and capacitor values

The following tables were sourced from RFCafe.com.

Standard Inductor Values from RFCafe.com			
nH, µH	nH, µH	nH, µH	nH, µH
1.0	10	100	1000
1.1	11	110	1100
1.2	12	120	1200
1.3	13	130	1300
1.5	15	150	1500
1.6	16	160	1600
1.8	18	180	1800
2.0	20	200	2000
2.2	22	220	2200
2.4	24	240	2400
2.7	27	270	2700
3.0	30	300	3000
3.3	33	330	3300
3.6	36	360	3600
3.9	39	390	3900
4.3	43	430	4300
4.7	47	470	4700
5.1	51	510	5100
5.6	56	560	5600
6.2	62	620	6200
6.8	68	680	6800
7.5	75	750	7500
8.2	82	820	8200
8.7	87	870	8700
9.1	91	910	9100

CAPACITOR COLOR CODE

Color	Significant Figure	Decimal Multiplier	Tolerance	Voltage Rating
Black	0	1		
Brown	1	10	1%	100 volts
Red	2	100	2%	200 volts
Orange	3	1,000	3%	300 volts
Yellow	4	10,000	4%	400 volts
Green	5	100,000	5%	500 volts
Blue	6	1,000,000	6%	600 volts
Violet	7	10,000,000	7%	700 volts
Gray	8	100,000,000	8%	800 volts
White	9	1,000,000,000	9%	900 volts
Gold		0.1	5%	1000 volts
Silver		0.01	10%	2000 volts
No Color			20%	500 volts

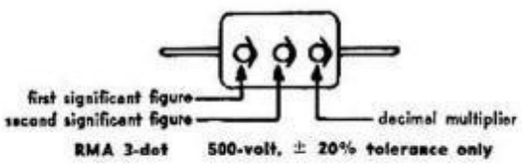

RMA 3-dot 500-volt, ± 20% tolerance only

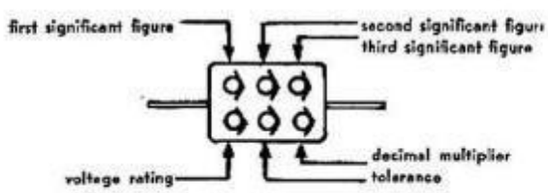

RMA 6-dot

Old Capacitor Color Code Chart

CERAMIC CAPACITOR COLOR CODE

Color	Significant Figure	Multiplier	Tolerance For Capacitance of More Than 10 μμf	Tolerance For Capacitance of 10 μμf or Less	Temperature Coefficient Parts/Million/°C	
Black	0	1	±20	±2.0μμf		0
Brown	1	10	± 1	±0.1μμf		—30
Red	2	100	± 2			—80
Orange	3	1,000		μμf		—150
Yellow	4					—220
Green	5		± 5	±0.5μμf		—330
Blue	6					—470
Violet	7					—750
Gray	8	0.01		±0.25μμf		+ 30
White	9	0.1	±10	±1.0μμf	—330	±500

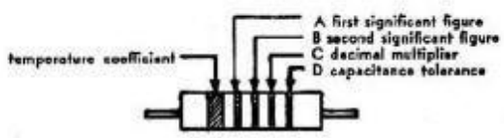

Wide Band A	Narrow Bands or Rots B	C	D	Description
Black	Black	Red	Black	Black 2.4μμf ± 2μμf. zero temp. coeff.
Blue	Red	Red	Black	Green 22μμf ± 5%. —470 ppm/°C. temp. coeff.
Violet	Gray	Red	Brown	Silver 820μμf ± 10%. —750 ppm/°C. temp. coeff.

Old Ceramic Axial Lead Capacitor Color Code Chart

These are the most commonly available capacitor values.
Tolerances are highly dependent on dielectric and package type.

pF	pF	pF	pF	μF	μF	μF	μF	μF	μF	μF
1.0	10	100	1000	0.01	0.1	1.0	10	100	1000	10,000
1.1	11	110	1100							
1.2	12	120	1200							
1.3	13	130	1300							
1.5	15	150	1500	0.015	0.15	1.5	15	150	1500	
1.6	16	160	1600							
1.8	18	180	1800							
2.0	20	200	2000							
2.2	22	220	2200	0.022	0.22	2.2	22	220	2200	
2.4	24	240	2400							
2.7	27	270	2700							
3.0	30	300	3000							
3.3	33	330	3300	0.033	0.33	3.3	33	330	3300	
3.6	36	360	3600							
3.9	39	390	3900							
4.3	43	430	4300							
4.7	47	470	4700	0.047	0.47	4.7	47	470	4700	
5.1	51	510	5100							
5.6	56	560	5600							
6.2	62	620	6200							
6.8	68	680	6800	0.068	0.68	6.8	68	680	6800	
7.5	75	750	7500							
8.2	82	820	8200							
9.1	91	910	9100							

Common Capacitor Working Voltages (DC), by Capacitor Type				
Ceramic	Electrolytic	Tantalum	Mylar (Polyester)	Mylar (Metal Film)
	10V	10V		
16V	16V	16V		
		20V		
25V	25V	25V		
	35V	35V		
50V	50V	50V	50V	
	63V			
100V	100V		100V	
	160V			
			200V	
	250V			250V
	350V			
			400V	400V
	450V			
600V				
				630V
1000V				